Laboratory 7

Cellular Automata

7.1 Outcomes and Objectives

The outcome of this lab is to instantiate a 1-dimensional cellular automata using D-Flip Flops and combinational logic. Through this process you will achieve the following learning objectives.

- Basic Memory Element Behavior
- Timing of basic memory element
- Definition of Verilog modules
- Synthesizing a module on the FPGA development board

7.2 1-dimensional Cellular Automata

A common research theme in intelligent systems is emergent complexity. This is the idea that complex behavior can arise from an interconnected arrangement of simple processing elements following simple rules.

Theory: Cellular Automata

As a testbench for this idea, Stephen Wolfram[1] explored emergent complexity in a 1-dimensional cellular automata (1-DCA) network. A 1-DCA is an array of processing elements, each of which has one of two states (called alive and dead) and is interconnected to the neighbors immediately to its left and right. The next state of each processing element depends on its current state and the current state of the neighbors to its immediate left and right. Let's explore the evolution of a 1-DCA using the setup shown in Figure 7.1, note that cells which are alive are shaded and cells which are dead are white.

Let's examine the next state of the 1-DCA shown in Figure 7.1 using the rule where:

- An alive cell stays alive when exactly 1 of its neighbors is alive, else it dies.
- A dead cell comes alive when exactly 1 of its neighbors is alive, else it stays dead.

[1] Wolfram, S. "Statistical Mechanics of Cellular Automata." Rev. Mod. Phys. 55, 601-644, 1983.

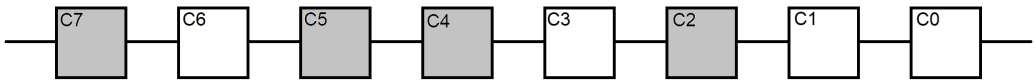

Figure 7.1: A 1-DCA consisting of 8 processing elements. Alive cells are shaded grey, dead white.

Complete the unfilled entries in Table 7.1 using the initial state shown in Figure 7.1 and the rule above. We will imagine that our processing elements are placed on a ring. This implies that the left neighbor of processing element C7 is C0 and the right neighbor of processing element of C0 is C7.

Table 7.1: Next state of a processing element based on its current state and number of alive neighbors.

Cell	**Current State**	**# Alive Neighbors**	**Next State**
C0	Dead		
C1	Dead		
C2	Alive	0	
C3	Dead		
C4	Alive		Alive
C5	Alive		
C6	Dead		
C7	Alive		

You are going to build a digital system to calculate the next state of a 9-element array of processing elements. In order to do this, you will need a way to easily specify the rule used to determine the next state of a cell because you are going to be able to change it. Before doing this, let's agree to associate the value of 1 for an alive cell and illustrate it as a filled black square and associate the value 0 with a dead cell and will illustrate it as an empty square.

We will formalize the next state rule by enumerating the next state of a cell for every configuration of its current state and its neighbor's state. Since a cell and its two neighbors can each have two states, there are a total of 8 configurations. As an example, I've graphically illustrated the rule used in our previous example, in Figure 7.2. This arrangement shows the 8 configurations arranged so the binary code of the current states goes from 3'b000 at right to 3'b111 at left. The next state for each configuration is shown as the center square below the current state configuration.

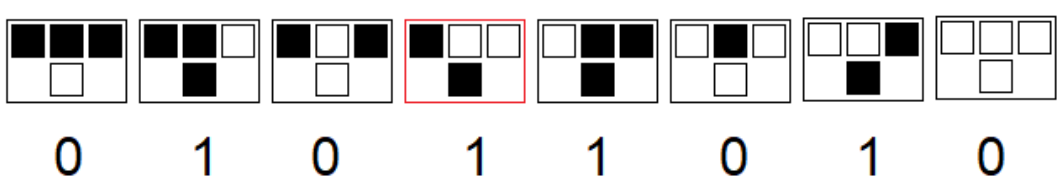

Figure 7.2: The next state of the center cell depends on the current state of the cell and its neighbors.

As an example, let's look at the 4th from the leftmost arrangement, outlined in red. In the top row of this arrangement, the center cell is dead and one of its neighbor's is alive. Note that this configuration has binary code 3'b100. Using the rule used to complete Table 7.1, the next state of this cell is alive, shown black. The next state value is placed below each configuration and the collection of related states form an 8-bit number 8'b01011010, which when interpreted as a decimal value is equal to 90. We will call the rule used to update the cells in Table 1, rule 90.

The fact that we are numbering this rule, implies that there may be others. In fact, there are 256 different rule sets. All rulesets having different properties and one, Rule 110, is even Turing Complete. You can create new rules by substituting new combinations of alive and dead states for each next states shown in Figure 7.2. Not all rules generate interesting behavior. For example, rule 0 immediately kills any and all alive cells producing a desert. Stephen Wolfram explored every combination of rules and characterized the resulting patterns into one of four classes depending on their sophistication. Wolfram illustrated this sophistication by arranging successive iterations of the 1-DCA as rows. As an example, if you start with a single alive cell and run Rule 90 over many iterations, drawing iteration below its predecessor, you get the image shown in Figure 7.3. Some of you may recognize this figure as the Sierpiński Triangle[2], an elementary fractal.

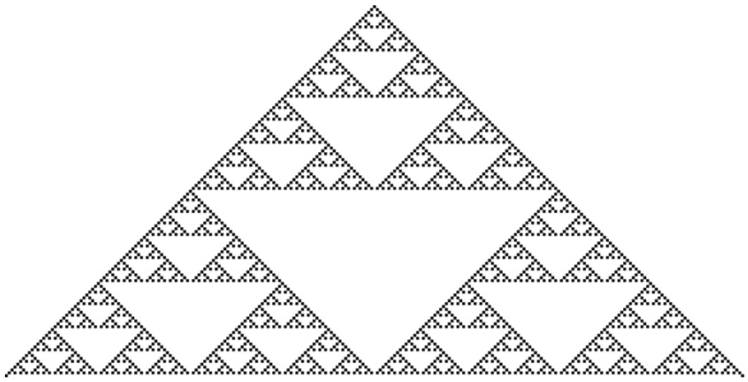

Figure 7.3: The evolution of a single alive cell (shown at top) under Rule 90.

You now have all the information and terminology you need to build a digital system to compute the next state of a 1-DCA, so let's get to it.

Implementation: Cellular Automata

You will use the inputs and outputs shown in Figure 7.4 to realize a 9 cell 1-DCA. I chose 9 cells so that we could have a unique center cell. Each of the 9 `Initial State` slide switches corresponds to one of the 9 cells. In order to set the state of the cells the `loadRun` slide switch must be in the down position. Moving the `Initial State` up/down will set its corresponding cell to 1/0 respectively when the array is clocked. A cell that is alive will illuminate its associated `CurrentState` LED. After the initial state of the cells is set, you should move the `loadRun` slide switch up and set the 8-bit rule value using the `Rule` slide switches. Every time that the array is clocked, the `CurrentState` LEDs will show the array.

[2] https://en.wikipedia.org/wiki/Sierpi%C5%84ski_triangle

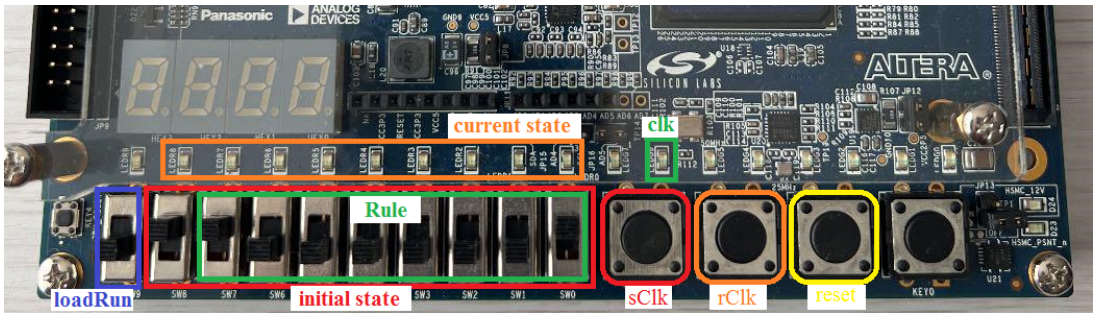

Figure 7.4: The input and output of the 1D cellular automata.

The `reset` button will reset the state of all the cells to 0 – dead. The clock is a bit more complex than you might expect because of switch bouncing. When you press one of the push buttons on the Cyclone V GX board, the signal generated may not transition smoothly from logic `0` to logic `1`. Instead, it may do something like that shown in Figure 7.5. In this figure, a single press of the button created four transitions from logic `0` to logic `1`. This happens because the metal contact attached to the round plastic button physically bounced off the metal contacts attached to the body of the button. This is more prone to happen if you quickly and sharply jab at the button.

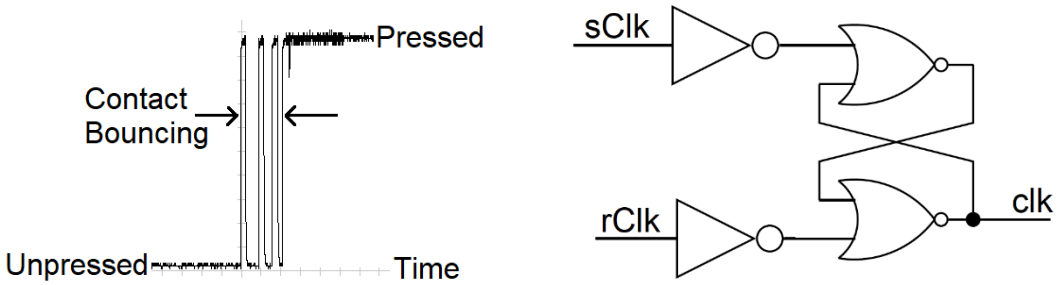

A B

Figure 7.5: A) Switch bouncing makes generating a single clock edge problematic. B) The organization of the SR latch to run the clock requires inverters in the sClk and rClk inputs and an SR latch to help remove signal bouncing.

However due to the mechanical nature of switches, even the most casual of presses may generate switch bouncing, so you are going to design a digital circuit (an SR latch) to prevent this from happening. When you press the `sClk` button, the clock signal will be set. When you press the `rClk` button, the `clk` signal will be reset. If the `sClk` or `rClk` bounces, the clock line will not bounce because this switch bounce will only cause the `clk` line to be repeatedly be set when it already set. Likewise, with the `rClk` signal repeatedly resetting the `clk` signal if `rClk` bounces. Finally, in order for you to know the state of the `clk`, its logic level is displayed on the `clk` LED.

Since the buttons driving the `rClk` and `sClk` signals are logic `0` when pressed, you will want to invert these two signals before feeding them into the SR latch as shown in Figure 7.5B. Thus, to toggle the clock signal you will press/release the `sClk` button to set `clk` to 1. Then

press/release the `rClk` button to clear the `clk` to `0`. Then back to `sClk`, etc. . .

7.3 System Architecture

The system architecture shown in Figure 7.6 shows the overall organization of the cellular automata. Slide switches [0-7] are used as the initial state when the `loadRun` slide switch is set to `0`. When the `loadRun` slide switch is set to `1`, slide switches [0-7] are used as the evolution rule. The clock is generated by the SR latch whose inputs are `sClk` and `rClk`. The state of the cells are displayed on the 9 red LEDs. The processing elements forming the array are called `singleCell` and discussed in the next section.

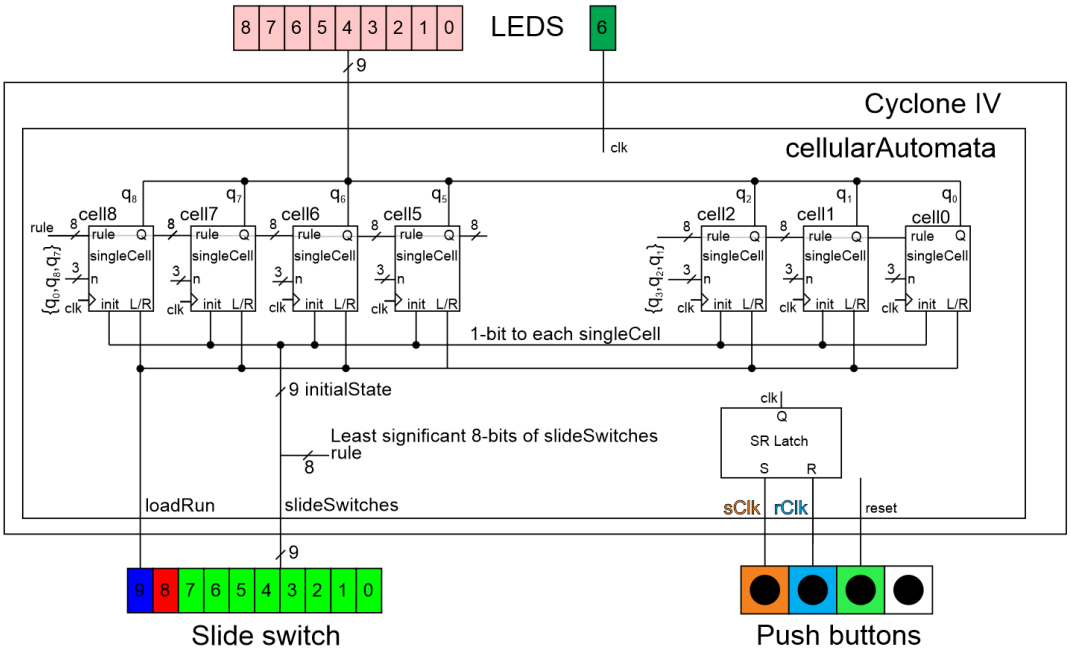

Figure 7.6: The system architecture of the `cellularAutomata`. Due to tight spacing, only the n inputs to cell8 and cell2 are shown.

The Verilog code for the `cellularAutomata` has been partially provided to you. You will need to complete the missing pieces. For this module:

- Use the **cellularAutomata.v** file provided in the Canvas folder as the starting point.
- Make a vector for the `rule` and `initialState` from the `slideSwitches` input vector.
- Make a 3-bit vector input for each `singleCell` by appending its current state to the two neighbors current state using the "{}" operators. See the `singleCell` module for more information.
- Connect the ends of the CA together
  - Make cell 8 have cell 0 as its "left" neighbor in Figure 7.6
  - Make cell 0 have cell 8 as its "right" neighbor in Figure 7.6
- Use cross-couples NORs and a pair of inverters to realize the SR-latch. This means that you should have two lines of Verilog Code for the SR-latch, both starting with "assign".

- You are encouraged to use the generate statement to instantiate `singleCell` 1-7. Due the ring architecture, you will need to instantiate cells 0 and 7 individually. For an example of the generate statement, look at the `adderSubtractor` provided to you in a previous lab.

7.4 Module: singleCell

The significant design problem in today's lab is building the `singleCell` module. The module interface for the `singleCell` module in Figure 7.6 used some shorthand for the signal names due to space constraints. The internal organization and module interface for the `singleCell` module is shown in Figure 7.7. For example, the output `currentState` in this figure was called Q in Figure 7.6. You should be able to decipher the rest of the signal abbreviations used in Figure 7.6.

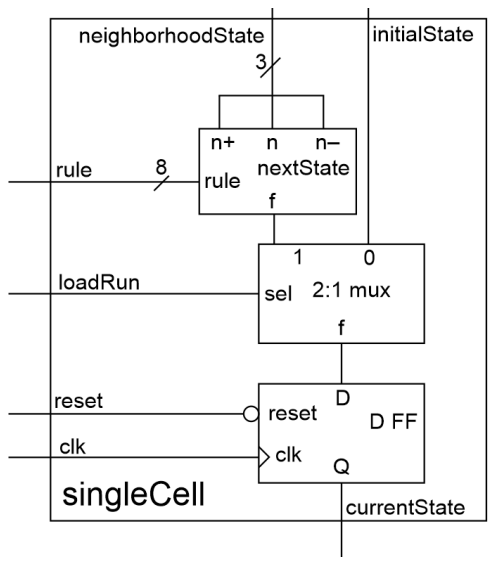

Figure 7.7: The architecture and module interface for the singleCell module.

The most complex portion of logic in the `singleCell` module is the box labeled `nextState`. This circuit has 11-bits of input. While it may seem a bit daunting at first, the Verilog code to realize this function is pretty straightforward when you have the right perspective. Table 7.2 lists all the combinations of states for a cell and its 2 neighbors in the left column (n+ is the state of the neighbor to the left, n the state of the cell itself, and n- the state to the right). These 8 combinations are the case values in the always/case statement for the `nextState` logic. You need to know the output for each of these cases. As an example, complete the `nextState` column in Table 7.2 for Rule 90 using the information in Figure 7.2. In the "Rule bit" column in Table 7.2, generalize the `nextState` column to the bit values in the 8-bit rule vector that is passed into the `singleCell` module.

Table 7.2: Input/output relationship for the `nextState` functionality in Figure 7.7.

{n+, n, n-}	nextState	Rule Bit
3'b000		
3'b001		
3'b010		rule[2]
3'b011		
3'b100	1	
3'b101		
3'b110		
3'b111		

For the `singleCell` module, I want you to:

- Use the **singleCell.v** file provided in the Canvas folder as the starting point.
- Use an always/case statement for the `nextState` logic
- Use the module definitions for:
  - Use the `genericMux2x1` from a previous lab.
  - Use the `dffNegEdge` module provided in the Canvas lab folder for this lab.
- Provide meaningful names to the wires in the module.
- Properly tab-indent your code
  - Single level for wire declarations
  - Single level for component instantiations
  - Two levels for case statement
  - Three levels for case values

7.5 Testbench

Run the testbench for the `cellularAutomata` module provided on Canvas. Produce a timing diagram with the following characteristics. Zoom to fill the available horizontal space with the waveform. Color inputs green and outputs red. Order the traces from top to bottom as

signal	radix	tracel color
reset	default	Blue
rule	unsigned	Blue
sButton	default	Green
rButton	default	Green
clk	default	Yellow
currentLifeState	hex	Red

Do not use the signals from the testbench, but rather the signals from inside the `cellularAutomata` module. You can do this in Questa, by expanding the **cellularAutomata_tb** instance in the left Questa and selecting "uut". Since uut is an instance of the `cellularAutomata` module, all the signals accessible in the `cellularAutomata` module are shown in the center Object. You can add signals using a drag-and-drop operation. Likewise, you can reorder the signals by dragging them. Your completed timing diagram should look something like Figure 7.8.

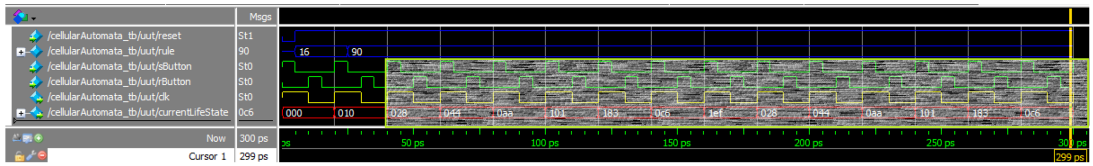

Figure 7.8: Partial timing diagram for the cellular automata.

7.6 Pin-Assignment and Synthesis

Use the image of the FPGA Board in Figure 7.1 and the information in the C5G User Guide to determine the FPGA pins associated with the input and output devices used by the cellular automata module.

Table 7.3: Pin assignment for the 1-D cellular automata.

Signal	Pin 1	Pin 2	LED Label	Notes
slide[9]	AE19		Clk / LEDG6	
slide[8]			led[8] / LEDR8	
slide[7]			led[7]	K8
slide[6]			led[6]	
slide[5]			led[5]	
slide[4]			led[4]	
slide[3]			led[3]	
slide[2]			led[2]	
slide[1]			led[1]	
slide[0]			led[0] / LEDR0	

Table 7.4: Key and pin mapping for control signals.

Signal	Key	Pin
`sClk`	Key[3]	
`rClk`	Key[2]	Y15
reset	Key[1]	

Complete the pin-assignment in Quartus, compile your design and download to the FGPA development boards. If you are having difficulty getting your circuit to work correctly, please refer to Section 7.8 for some useful debugging tips.

Once you get your design working, demonstrate it to a member of the lab team.

7.7 Turn in

You may work in teams of at most two. Make a record of your response to the items below and turn them in a single copy as your team's solution on Canvas using the instructions posted there. Include the names of both team members at the top of your solutions. Use complete English sentences to introduce what each of the following listed items (below) is and how it was derived. In addition to this submission, you will be expected to demonstrate your circuit at the beginning of your lab section next week.

Cellular Automata Module

- Complete Table 7.1.
- Link Verilog code for the body of the `cellularAutomata` module (courier 8-point font single spaced), leave out header comments.

singleCell Module

- Complete Table 7.2.
- Link Verilog code for the body of the `singleCell` module (courier 8-point font single spaced), leave out header comments.

Testbench

- Complete testbench and timing diagram from Section 7.5.

Pin-Assignment and Synthesis

- Complete the pin assignment in table 7.3.
- Demonstrate your completed circuit to a lab team member.

7.8 Debugging Tips

To provide you with some examples to run on the Altera boards, the following table illustrates the evolution of the CA with different initial conditions and different rules.

- In the left most column contains several different rows
  - The row labeled "Rule #" is the rule that you will enter on the slide switches. The binary code of the rule is provided to make setting your dip switches easier.
  - The row labeled "start" is the initial load value stored in the CA. A value of "x" means that the initial load value doesn't matter (don't care).
  - The rows labeled "iteration" count successive positive edges generated by the clock.
- The column labeled "$q_8q_7q_6q_5$" is the output from the 4 most significant bits of the CA
- The column labeled "q_4" is the output from the middle bit of the CA
- The column labeled "$q_3q_2q_1q_0$" is the output from the 4 least significant bits of the CA

Table 7.5: Cellular automata rule iterations.

Rule	**Left Cells**	**Center**	**Right Cells**
Rule 0: 0000 0000			
Start:	XXXX	X	XXXX
Final:	0000	0	0000
Rule 255: 1111 1111			
Start:	XXXX	X	XXXX
Final:	1111	1	1111
Rule 90: 0101 1010			
Start:	0000	1	0000
1st Iteration:	0001	0	1000
2nd Iteration:	0010	0	0100
3rd Iteration:	0101	0	1010
4th Iteration:	1000	0	0001

Table 7.5: Cellular automata rule iterations.

Rule	**Left Cells**	**Center**	**Right Cells**
5th Iteration:	1100	0	0011
6th Iteration:	0110	0	0110
7th Iteration:	1111	0	1111
Rule 90 (Alternate Start): 0101 1010			
Start:	1011	0	1101
1st Iteration:	1011	0	1101
Final:	1011	0	1101
Rule 254: 1111 1110			
Start:	1000	0	0000
1st Iteration:	1100	0	0001
2nd Iteration:	1110	0	0011
3rd Iteration:	1111	0	0111
Final:	1111	1	1111